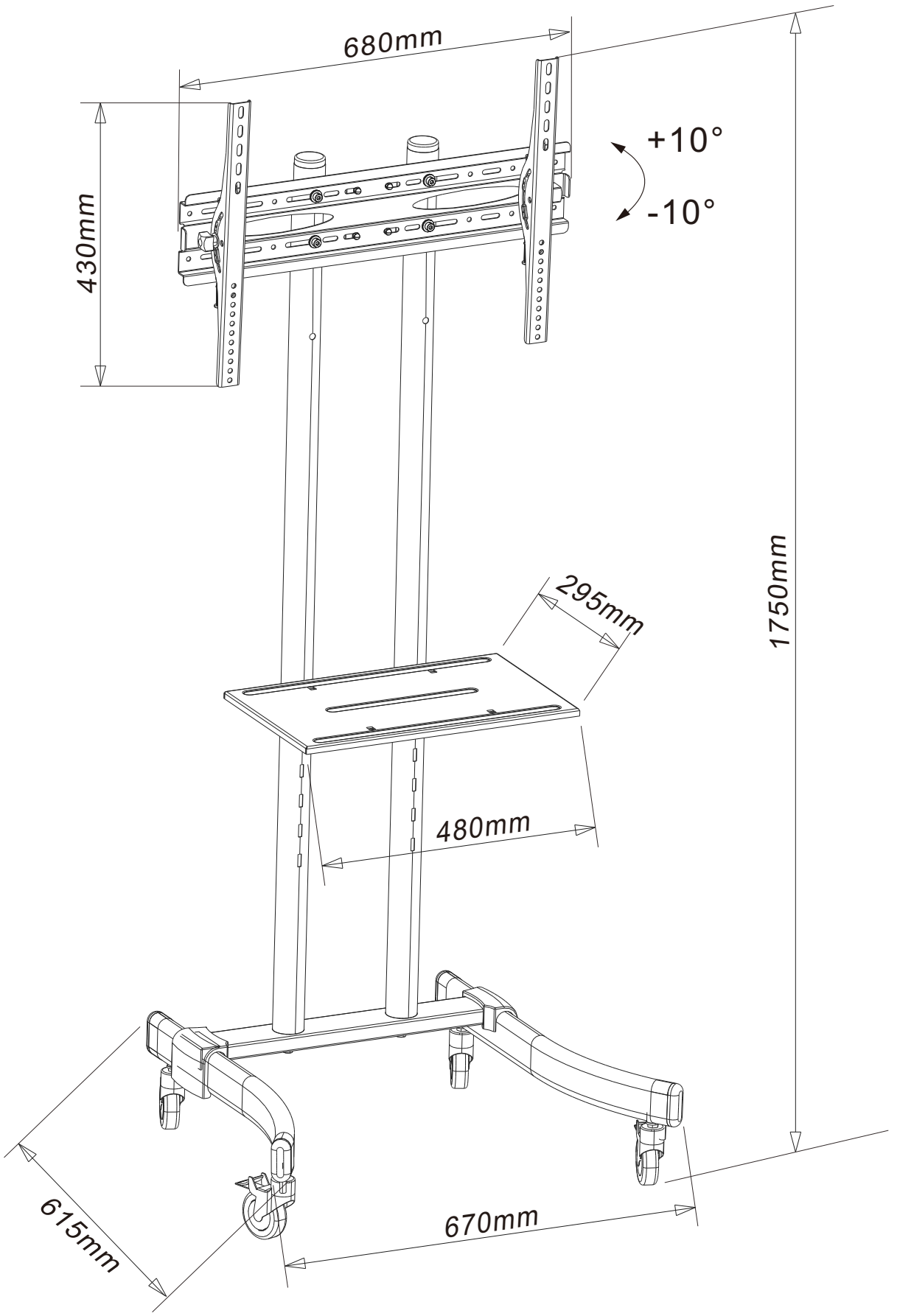
680mm
430mm
+10°
-10°
295mm
1750mm
480mm
615mm
670mm